Supplies current to resistor ladder (located on DFM top plate)

Rev A: Changed R15 from 100K to 39K
Changed R13 from 61.9K to 43K
Swapped pins 3 and 4 of U5
Disconnected U2 pin 5.
Connected U2 pin 8 to 24V
Connected U2 pin 1 to ground.

Non-inverting comparator

Threshold adjustment

Adjust VR1 for TP2 voltage. Set midway between TP3 full voltage and TP3 with one of the ladder resistors (R50 R70) shorted.

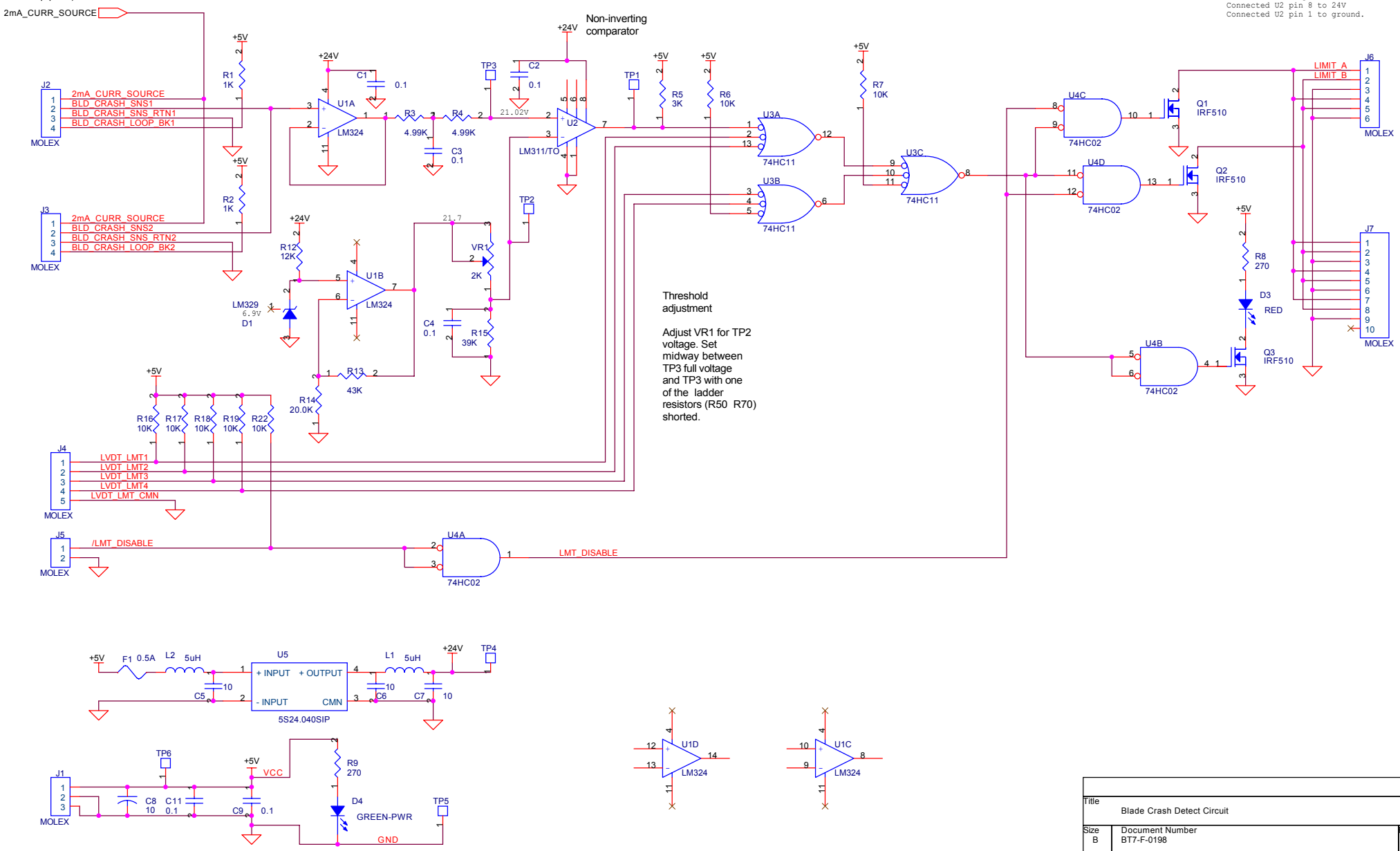

Title	Blade Crash Detect Circuit	
Size B	Document Number BT7-F-0198	Rev -
Date: Thursday, January 30, 2003	Sheet 2 of 2	