REVISIONS				
No.	ZONE	ECN	CHANGE	DATE
1				

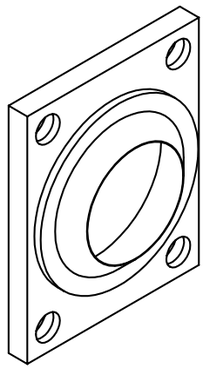

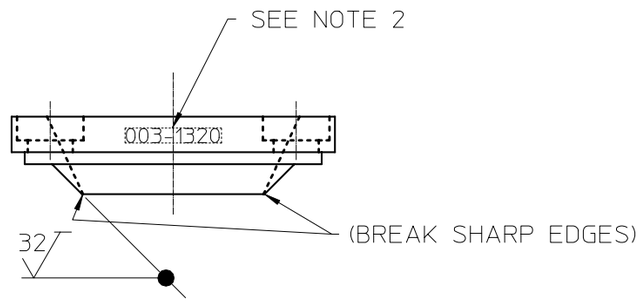

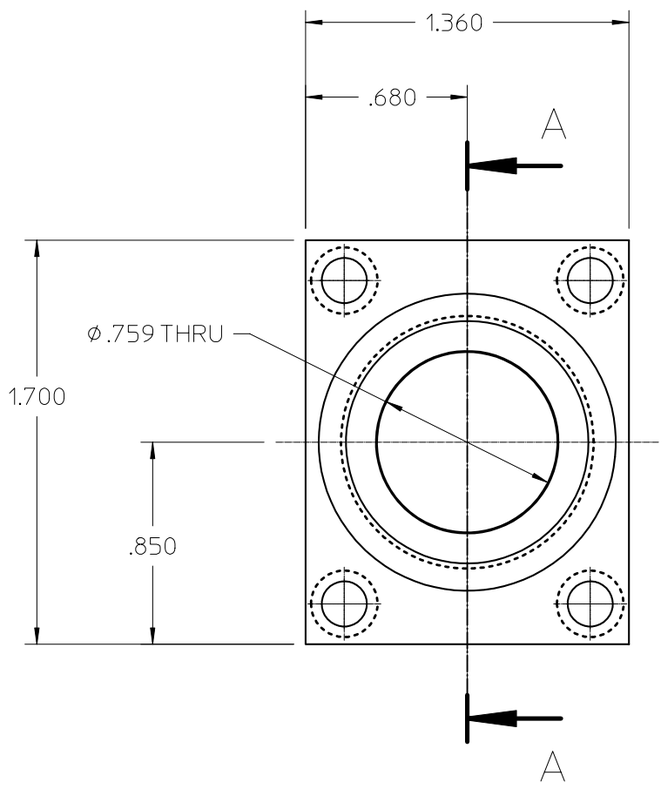

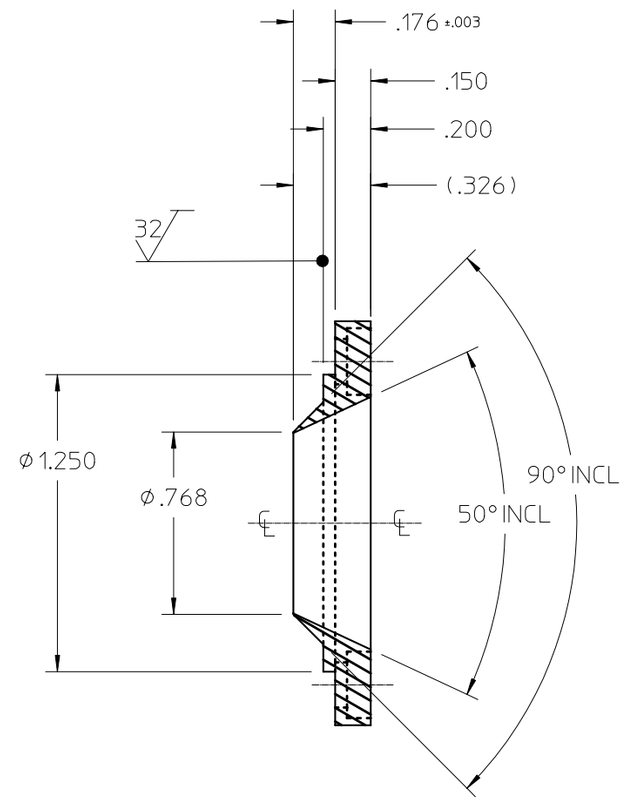

SECTION A-A

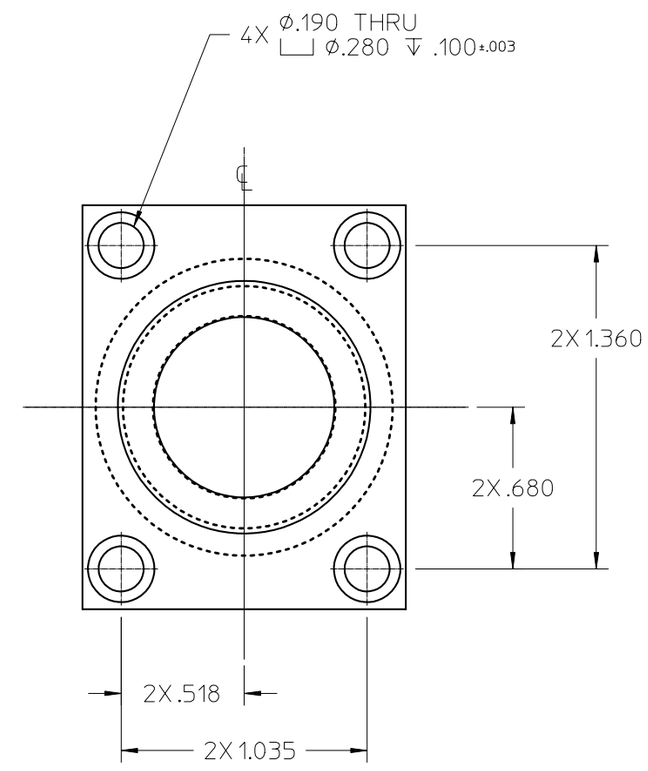

NOTES:
1. BREAK ALL SHARP EDGS .005 TO .015
2. STEEL STAMP, SCRIBE, OR ETCH "003-1320" USING .12 HIGH CHARACTERS LOCATED APPROX WHERE SHOWN.
3. O-RING AS568A DASH NUMBER 117

MATERIAL SPECIFICATION		APPROVALS	
MATERIAL: TITANIUM, GRADE 2, R50400		ENGR	DATE
FORM: BAR	SIZE	ENGR MNGR	DATE
MODEL DATA		DRAWING DATA	
MODEL NAME: cg_cell_ret_nu		STATE: work	DATE: 1/28/05 1:31 PM
CREATOR: allen	DATE: 1/14/05 10:41 AM	VERSION: 1	SHEETS: 1
		DRAFTER: allen	DATE: 1/28/05 1:31 PM
		LAST UPDATE BY: allen	DATE: 2/11/05 9:29 AM

UNLESS OTHERWISE SPECIFIED
DIMENSIONS ARE IN INCHES
TOLERANCES ARE :
DECIMALS .XXX ±.005 FRACTIONS ±.015
.XX ±.01
ANGLES ±.5
DO NOT SCALE DRAWING
THIRD ANGLE PROJECTION

ENGINEER: allen
PHONE #

NIST
National Institute of Standards and Technology
Technology Administration, U.S. Department of Commerce

CENTER FOR NEUTRON RESEARCH
100 BUREAU DRIVE
GAITHERSBURG, MD. 20899

CG CELL RETAINING PLATE

FOR

SIZE: C | DWG No.: 003–1320 | REV: 1

SCALE: 2:1 | RELEASE DATE | SHEET: 1 of 1

CALC. WT. | ACT. WT. | DIM. & TOL. PER ANSI Y14.5M-1982

mm_size