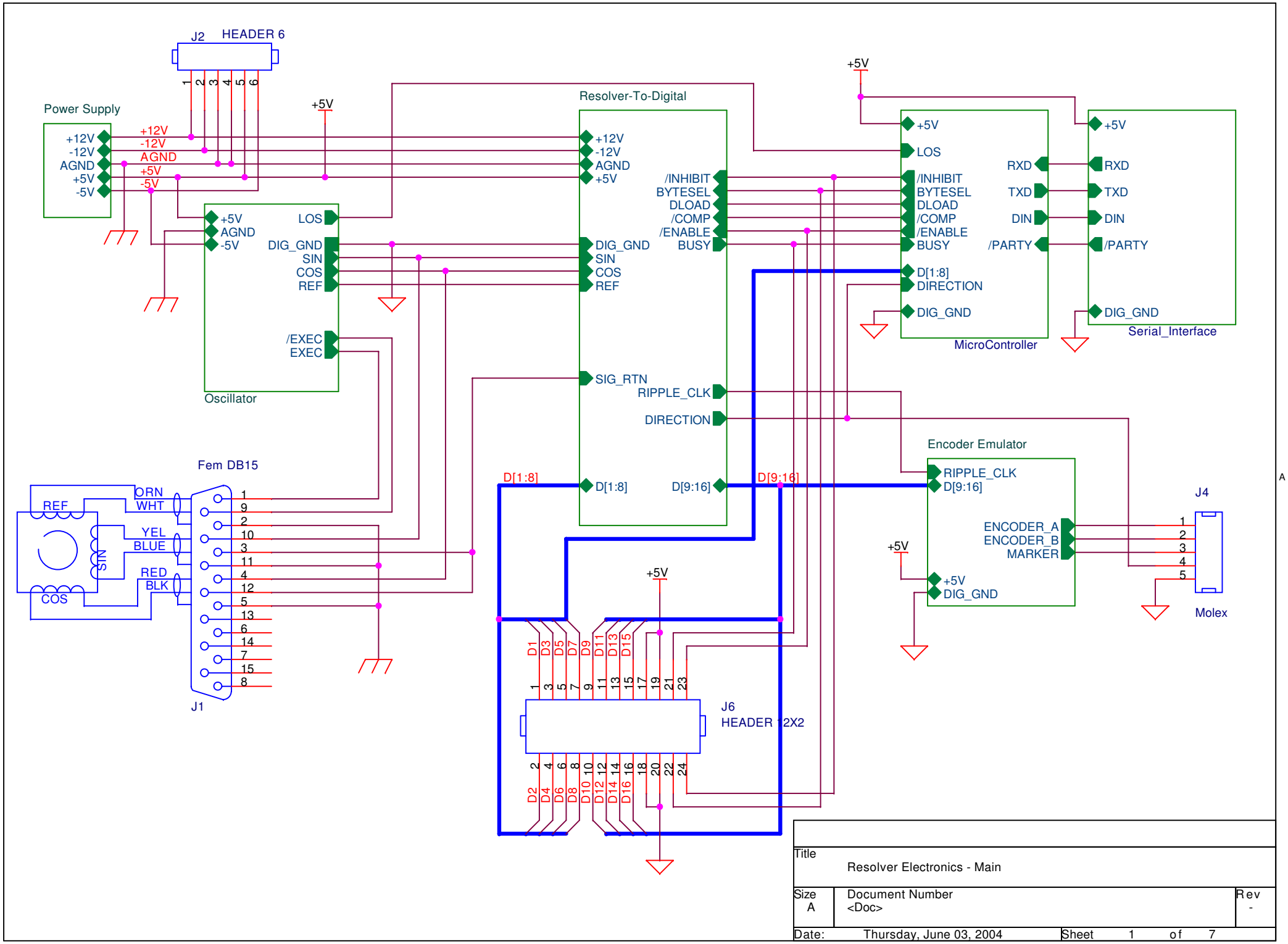
J2
HEADER 6
Power Supply
+12V
-12V
AGND
+5V
-5V
Resolver-To-Digital
/INHIBIT
BYTESEL
DLOAD
/COMP
/ENABLE
BUSY
DIG_GND
SIN
COS
REF
SIG_RTN
RIPPLE_CLK
DIRECTION
D[1:8]
D[9:16]
Oscillator
LOS
/EXEC
EXEC
MicroController
RXD
TXD
DIN
/PARTY
Serial_Interface
Encoder Emulator
ENCODER_A
ENCODER_B
MARKER
J4
Molex
Fem DB15
J1
ORN
WHT
YEL
BLUE
RED
BLK
REF
SIN
COS
J6
HEADER 12X2
Title
Resolver Electronics - Main
Size
A
Document Number
<Doc>
Rev
-
Date:
Thursday, June 03, 2004
Sheet
1
of
7

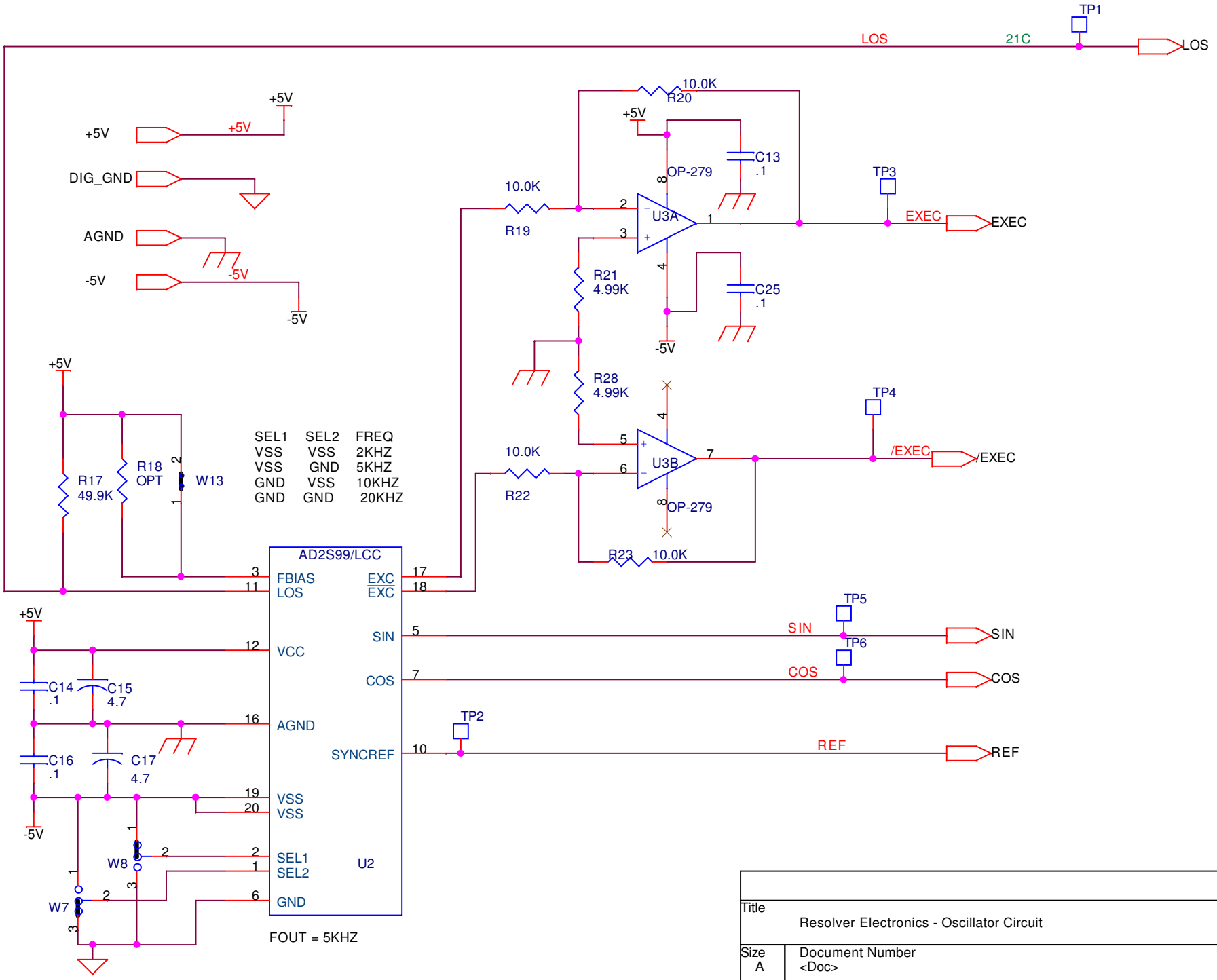


| | | |
|---|---|---|
| Title | Resolver Electronics - Oscillator Circuit | |
| Size A | Document Number <Doc> | Rev - |
| Date: Tuesday, June 01, 2004 | Sheet 2 of 7 | |

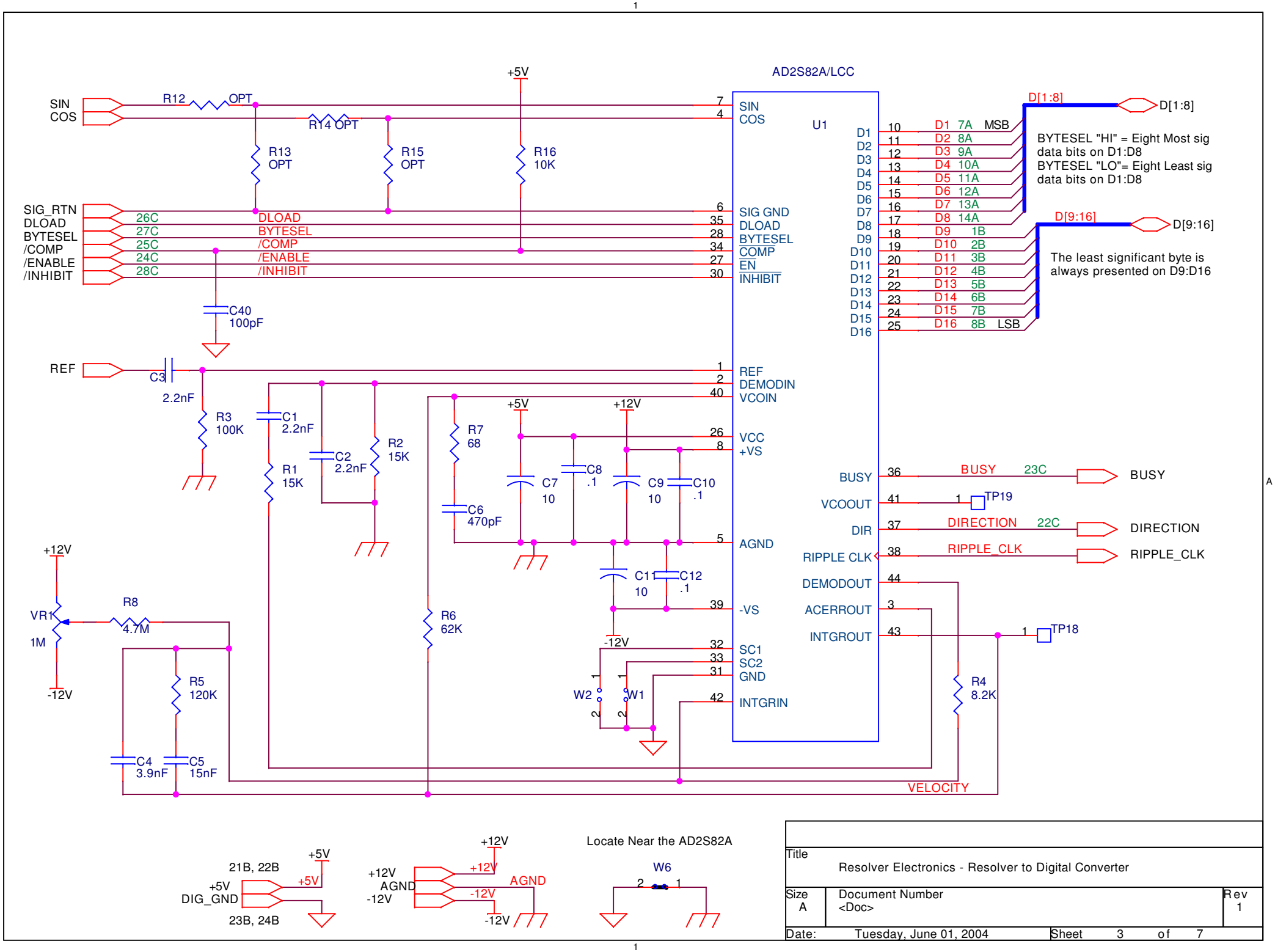


| | | |
|---|---|---|
| Title | Resolver Electronics - Resolver to Digital Converter | |
| Size A | Document Number <Doc> | Rev 1 |
| Date: Tuesday, June 01, 2004 | Sheet 3 of 7 | |

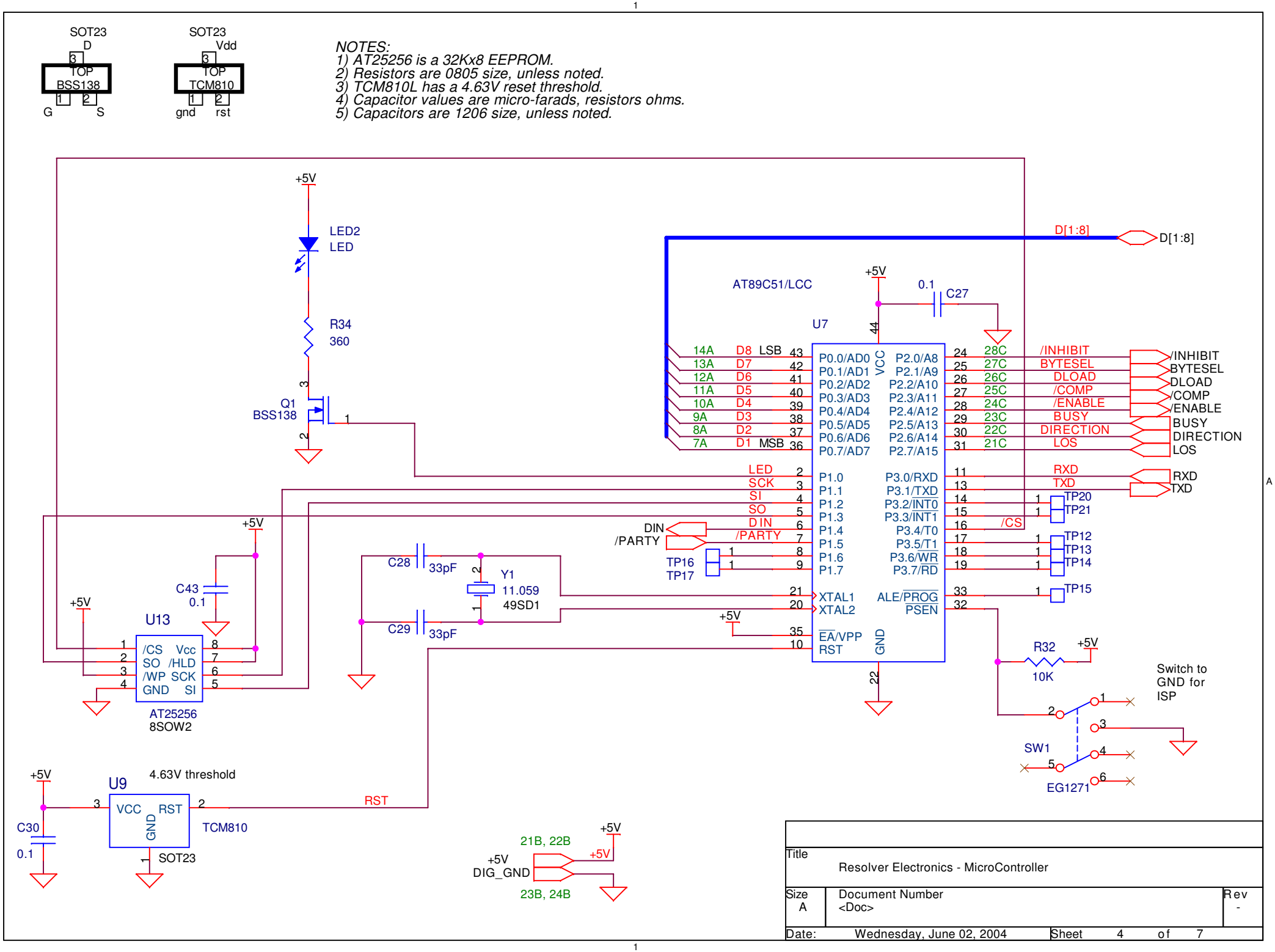
SOT23
D
TOP
BSS138
G
S
SOT23
Vdd
TOP
TCM810
gnd
rst
NOTES:
1) AT25256 is a 32Kx8 EEPROM.
2) Resistors are 0805 size, unless noted.
3) TCM810L has a 4.63V reset threshold.
4) Capacitor values are micro-farads, resistors ohms.
5) Capacitors are 1206 size, unless noted.
+5V
LED2
LED
R34
360
Q1
BSS138
D[1:8]
AT89C51/LCC
U7
C27
0.1
VCC
GND
P0.0/AD0
P0.1/AD1
P0.2/AD2
P0.3/AD3
P0.4/AD4
P0.5/AD5
P0.6/AD6
P0.7/AD7
P2.0/A8
P2.1/A9
P2.2/A10
P2.3/A11
P2.4/A12
P2.5/A13
P2.6/A14
P2.7/A15
P1.0
P1.1
P1.2
P1.3
P1.4
P1.5
P1.6
P1.7
P3.0/RXD
P3.1/TXD
P3.2/INT0
P3.3/INT1
P3.4/T0
P3.5/T1
P3.6/WR
P3.7/RD
XTAL1
XTAL2
ALE/PROG
PSEN
EA/VPP
RST
14A D8 LSB
13A D7
12A D6
11A D5
10A D4
9A D3
8A D2
7A D1 MSB
28C /INHIBIT
27C BYTESEL
26C DLOAD
25C /COMP
24C /ENABLE
23C BUSY
22C DIRECTION
21C LOS
LED
SCK
SI
SO
DIN
/PARTY
RXD
TXD
/CS
TP20
TP21
TP12
TP13
TP14
TP15
TP16
TP17
DIN
/PARTY
C28
33pF
C29
33pF
Y1
11.059
49SD1
C43
0.1
U13
/CS Vcc
SO /HLD
/WP SCK
GND SI
AT25256
8SOW2
R32
10K
Switch to
GND for
ISP
SW1
EG1271
U9
4.63V threshold
VCC RST
GND
TCM810
SOT23
C30
0.1
RST
21B, 22B
+5V
DIG_GND
23B, 24B
Title
Resolver Electronics - MicroController
Size
A
Document Number
<Doc>
Rev
-
Date: Wednesday, June 02, 2004
Sheet 4 of 7

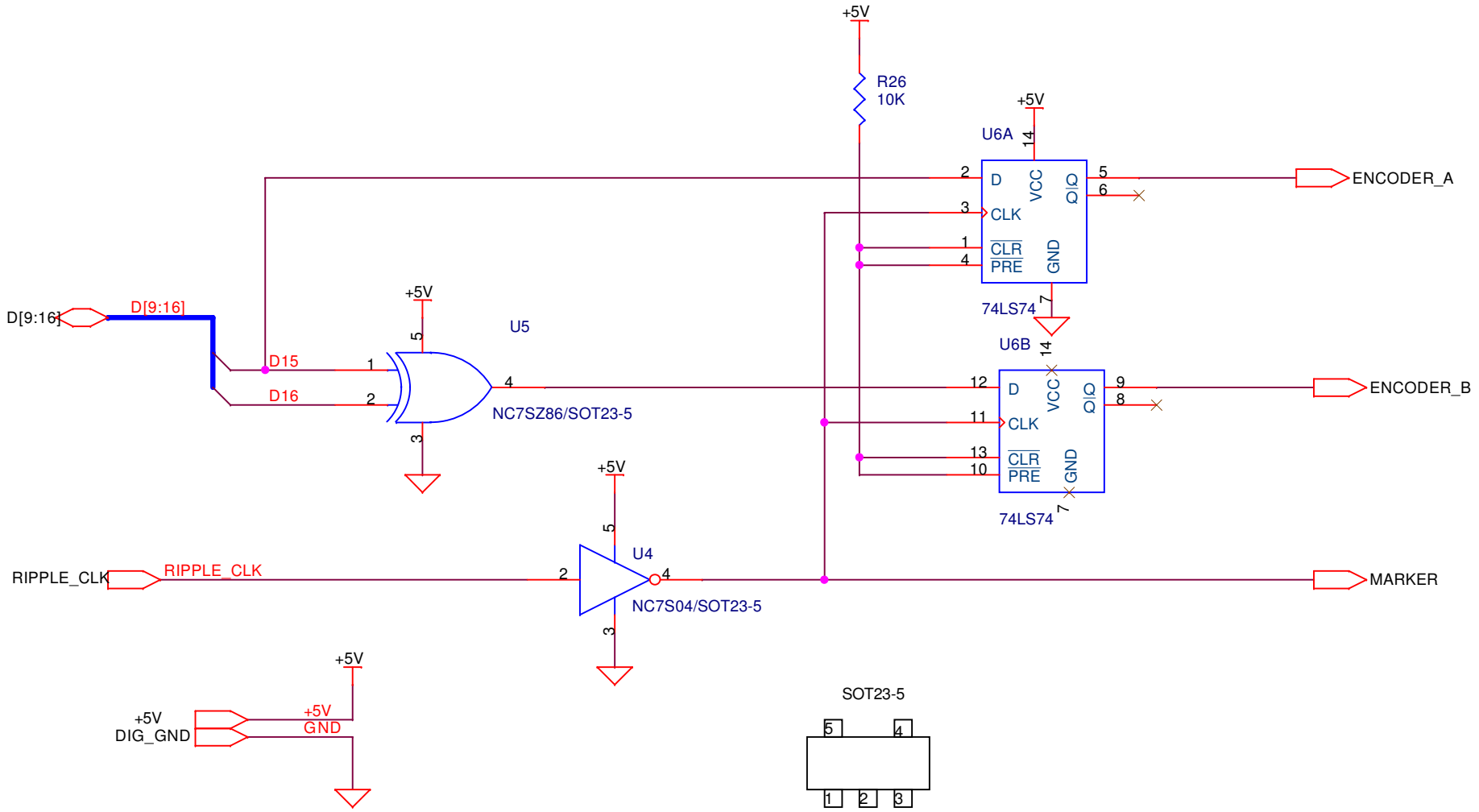


| | | |
|---|---|---|
| Title | Resolver Electronics - Encoder Simulator | |
| Size A | Document Number <Doc> | Rev - |
| Date: Wednesday, June 02, 2004 | Sheet 5 of 7 | |

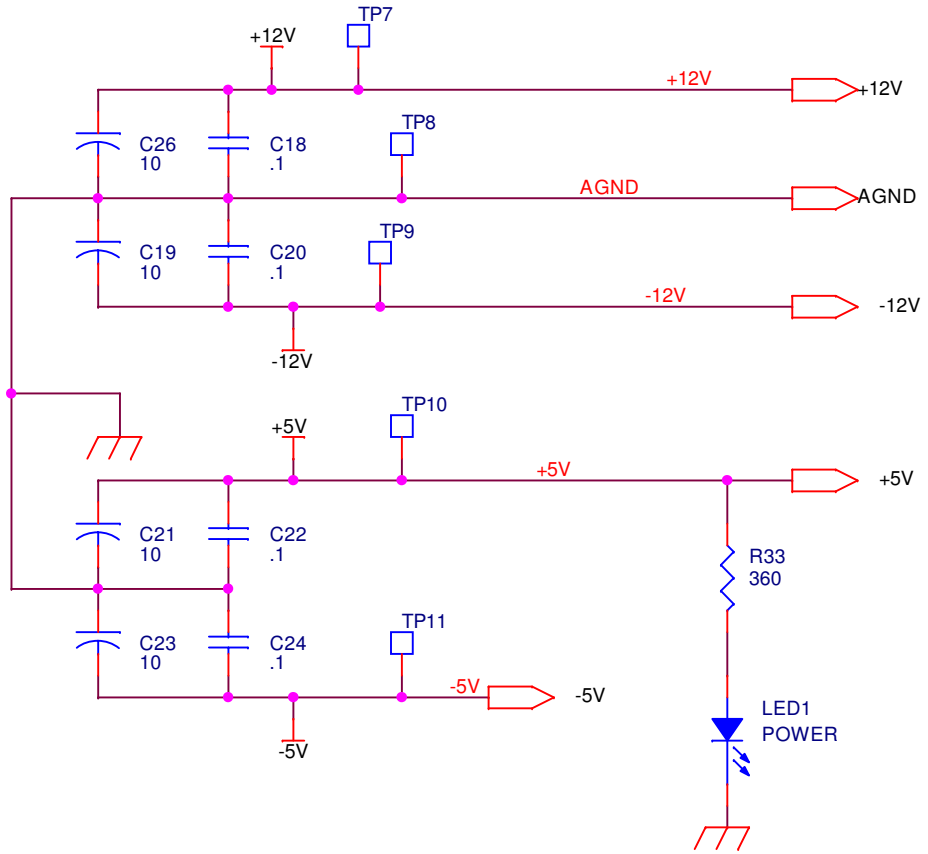


| | | |
|---|---|---|
| Title | Resolver Electronics - Power Supply | |
| Size A | Document Number <Doc> | Rev - |
| Date: Tuesday, June 01, 2004 | Sheet 6 of 7 | |

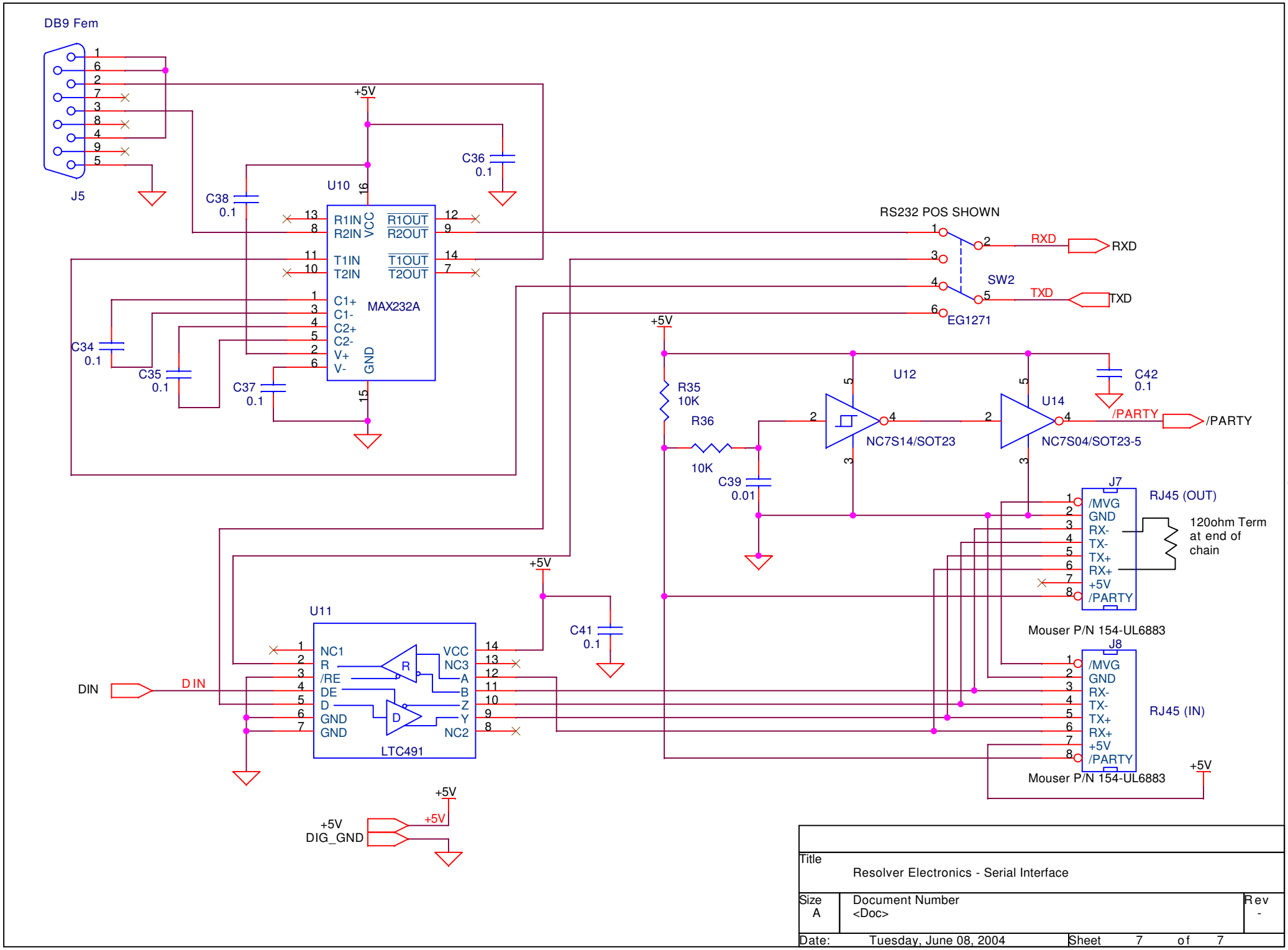
DB9 Fem
J5
+5V
C36
0.1
C38
0.1
U10
MAX232A
R1IN
R2IN
VCC
R1OUT
R2OUT
T1IN
T2IN
T1OUT
T2OUT
C1+
C1-
C2+
C2-
V+
V-
GND
C34
0.1
C35
0.1
C37
0.1
RS232 POS SHOWN
SW2
EG1271
RXD
TXD
R35
10K
R36
10K
C39
0.01
U12
NC7S14/SOT23
U14
NC7S04/SOT23-5
C42
0.1
/PARTY
J7
RJ45 (OUT)
/MVG
GND
RX-
TX-
TX+
RX+
+5V
/PARTY
120ohm Term
at end of
chain
Mouser P/N 154-UL6883
J8
RJ45 (IN)
Mouser P/N 154-UL6883
U11
NC1
R
/RE
DE
D
GND
GND
VCC
NC3
A
B
Z
Y
NC2
LTC491
C41
0.1
DIN
+5V
DIG_GND
Title
Resolver Electronics - Serial Interface
Size
A
Document Number
<Doc>
Rev
-
Date:
Tuesday, June 08, 2004
Sheet
7
of
7