Revisions			
Rev.	Description	Date	Apprv.

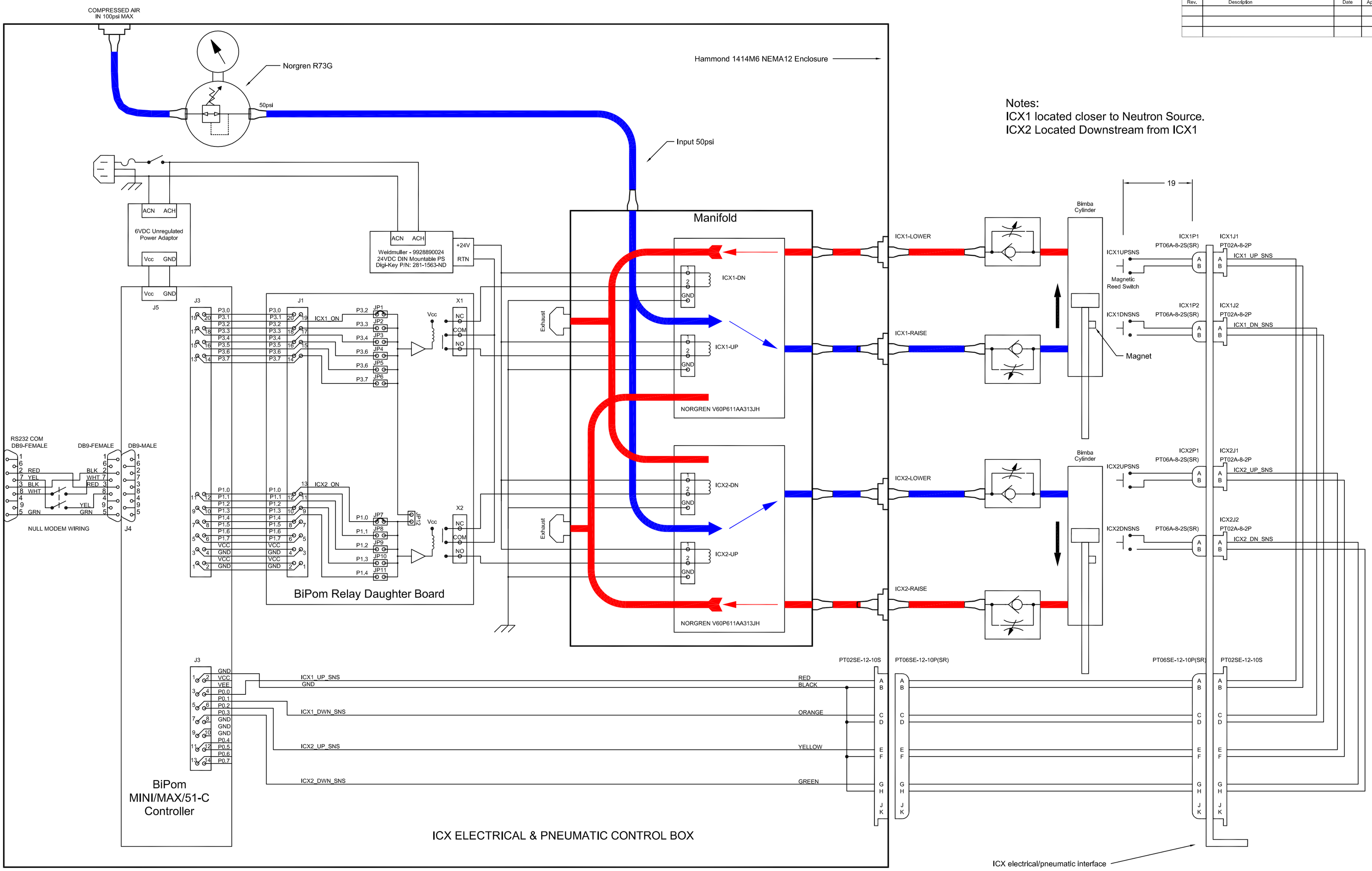

IDG INSTRUMENT DEVELOPMENT GROUP

ICX Controller Schematic

Drawn	Date	Size	Drawing Number	Rev
J. Orndorff	8-15-2005	A		-
Checked	Date	Scale	File	Sheet
		nts		1 of 1