| REVISIONS | | | | |
|---|---|---|---|---|
| No. | ZONE | ECN | CHANGE | DATE |
| B | | | GENERAL REVISION | |

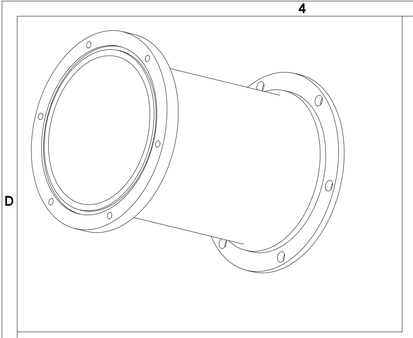

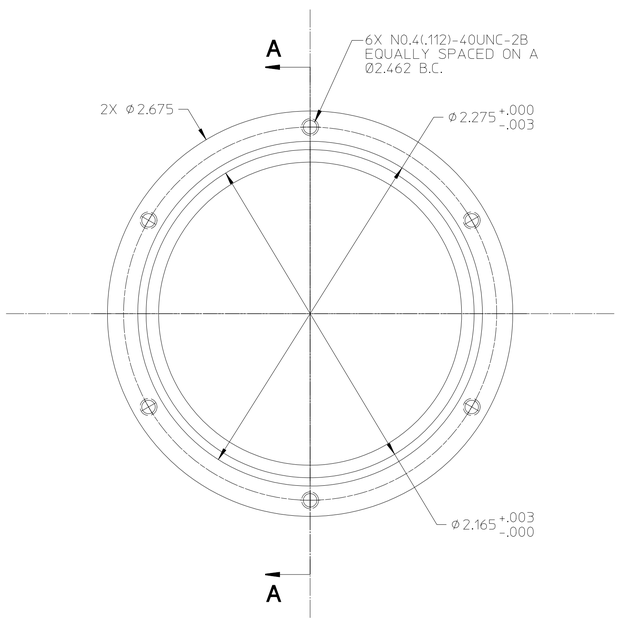


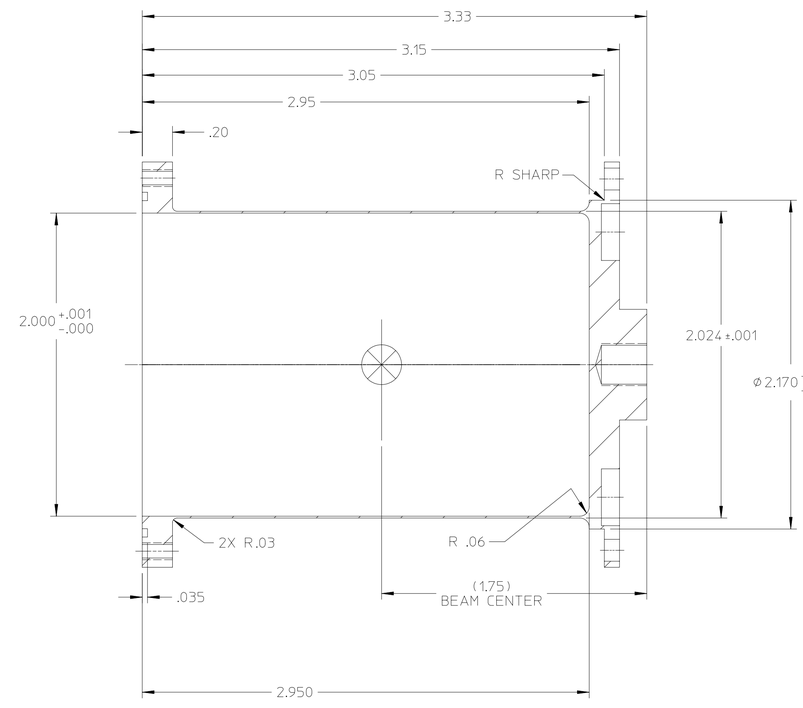


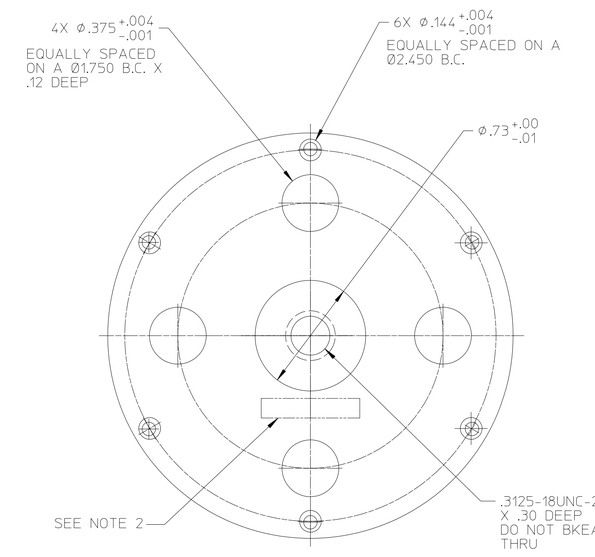


## SECTION A–A

NOTES:

1. BREAK ALL SHARP EDGED .005 TO .015. DO NOT TUMBLE CAN.
2. SCRIBE DRAWING NUMBER .125 HIGH, APPROX WHERE SHOWN.

| MATERIAL SPECIFICATION | | APPROVALS | |
|---|---|---|---|
| MATERIAL: ALUMINUM, 6061-T6 | | ENGR | DATE |
| SIZE | MATERIAL FORM | ENGR MNGR | DATE |
| CAD DATA | | ANNOTATION DRAWING DATA | |
| PART NAME | | STATE: work | DATE: 7/24/00 9:28 AM |
| CREATOR: John Baley | DATE: 07/20/00 | VERSION: B | SHEETS |
| STATE: work | DATE: 7/20/00 2:37 PM | DRAFTER | DATE |
| LAST UPDATE BY: john | DATE: 7/24/00 9:29 AM | LAST UPDATE BY: john | DATE: 6/20/02 3:20 PM |

UNLESS OTHERWISE SPECIFIED DIMENSIONS ARE IN INCHES
TOLERANCES ARE:
DECIMALS .XXX ±.005 .XX ±.01 — FRACTIONS ±.015
ANGLES ±.5
DO NOT SCALE DRAWING
THIRD ANGLE PROJECTION
ENGINEER: John Baley
PHONE #: (301) 975-8364


NIST
National Institute of Standards and Technology
Technology Administration, U.S. Department of Commerce
CENTER FOR NEUTRON RESEARCH
100 BUREAU DRIVE
GAITHERSBURG, MD. 20899


BODY, SAMPLE CAN

FOR: SAMPLE CAN ASSEMBLY, 02.0 INSIDE

| SIZE | DWG No. | REV |
|---|---|---|
| D | 014–0244 | B |

| SCALE | RELEASE DATE | NEXT ASSY. | SHEET |
|---|---|---|---|
| 2:1 | | | 1 of |

| CALC. WT. | ACT. WT. | DIM. & TOL. PER ANSI Y14.5M-1982 |
|---|---|---|

wm_D